MODEL LG1-T-M10

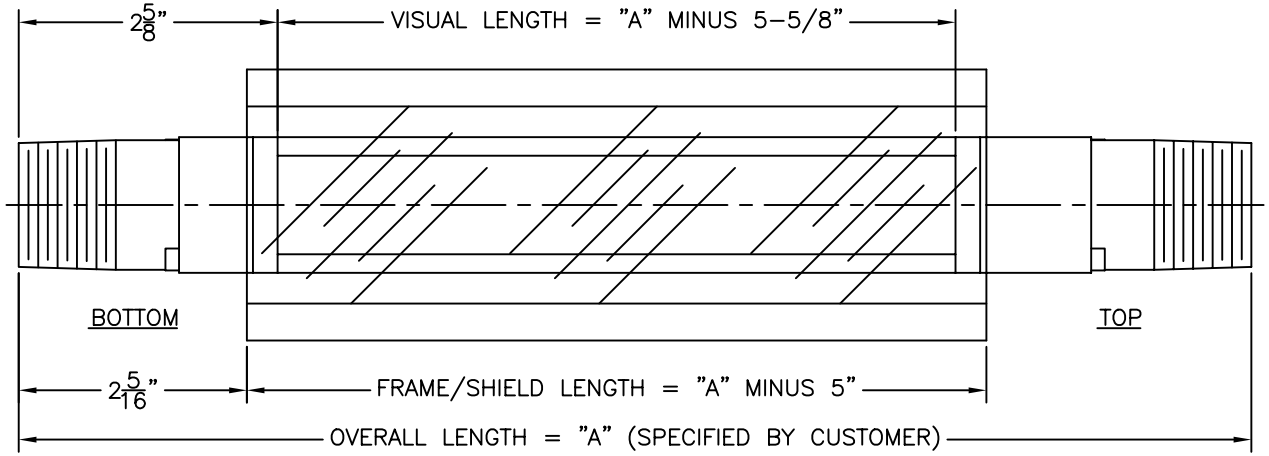

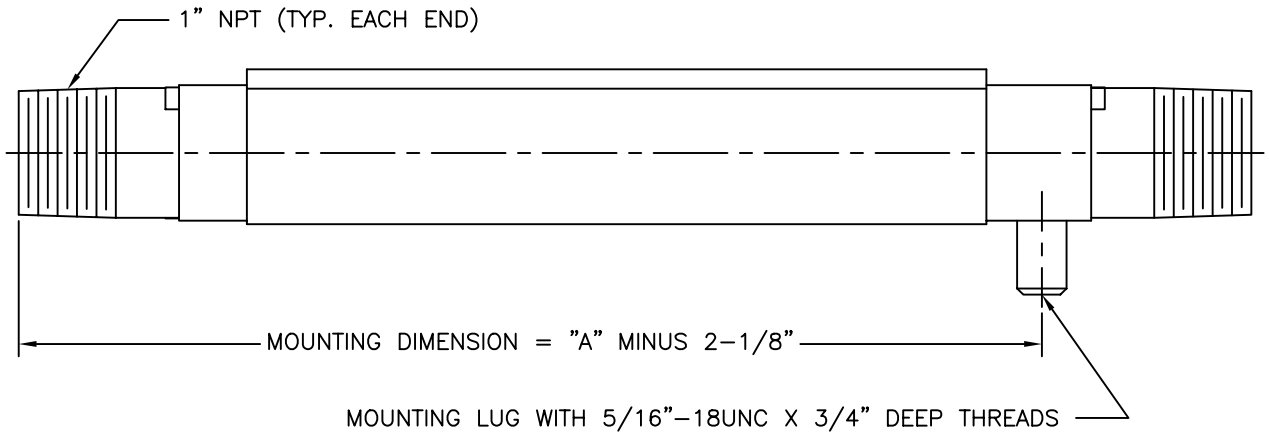

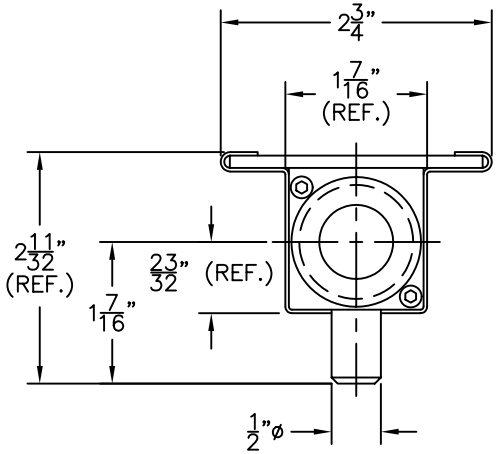

DIMENSION ARE FOR REFERENCE PURPOSES ONLY AND ARE SUBJECT TO CHANGE AT ANY TIME WITHOUT NOTICE.

COPYRIGHT 2006 - J.G. PAPAILIAS CO., INC. - ALL RIGHTS RESERVED

J.G. PAPAILIAS CO., INC.
245 Pegasus Avenue
Northvale, NJ 07647
(201)767–4027 Fax: (201)767–7870
www.papailias.com sales@papailias.com

REV.	DATE	BY	ECN	EXPLANATION:

PAPAILIAS INCORPORATED
245 PEGASUS AVENUE, NORTHVALE, NJ 07647

ARMORED TUBULAR LIQUID LEVEL GAUGE
(OUTLINE DRAWING) SERIES LG1–T
WITH MNPT END PROCESS CONNECTIONS

DATE: 12/11/06	SHEET: 1 OF 1	DRAWING NUMBER
DRN. BY: RPS	CHKD. BY: DS	LG1–T–M10
SCALE: NTS	REVISION:	